(Online) ISSN 2712-0554
Original Research

Heritage and Sustainable Development
Vol. 8, No. 2, 2026, pp.493-506
https://doi.org/10.37868/hsd.v8i2.2419

Residents' intention to participate in cultural heritage conservation in the context of sustainable development: Empirical evidence from Northern Vietnam

Vu Thi Nga[1], Nguyen Thi Ngoc Lam[2*], Nguyen Thi Viet Hung[3], Nguyen Thi Thanh Nga[4]

[1] University of Social Sciences and Humanities, Vietnam National University, Ho Chi Minh City, Vietnam
[2] Hanoi University of Culture, Hanoi, Vietnam
[3,4] Hong Duc University, Thanh Hoa, Vietnam

*Corresponding author E-mail: lamntn@huc.edu.vn

Received Jul. 27, 2026
Revised Oct. 29, 2026
Accepted Nov. 3, 2026
Online Nov. 26, 2026

Abstract

This study investigates the relationships between perceived benefits (PB), heritage value awareness (HVA), local government support (LGS), perceived behavioral control (PBC) and residents' intention to engage in cultural heritage conservation in Northern Vietnam. Using a combination of social exchange theory, place attachment theory, planned behavior theory, and equity theory, the model includes perceived fairness in benefit sharing (PFBS) as a moderator and heritage/place attachment (HPA) as a mediator. The data were collected using 15 semi-structured interviews, a pilot survey of 60 respondents, and 600 usable survey data, which were analyzed using SPSS and AMOS in a mixed-methods design. Two items (HPA6 and PBC5) were removed following exploratory factor analysis. In the structural model, PB ($\beta = 0.311$), HVA ($\beta = 0.236$), LGS ($\beta = 0.255$), and PBC ($\beta = 0.276$) were positively associated with HPA. The participation intention was positively correlated with PB ($\beta = 0.320$) and HPA ($\beta = 0.215$). All four antecedent-intention relationships were statistically mediated by HPA, and PFBS enhanced the PB-intention association (interaction $\beta = 0.162$; $p < 0.001$). The results offer an integrated perspective on social sustainability in the governance of heritage: emotional attachment and perceived fairness in benefit distribution are alongside perceived benefits and participation capacity.

© The Author 2026.
Published by ARDA.

Keywords: Cultural heritage conservation, Residents' participation, Heritage/place attachment, Benefit-sharing fairness, Sustainable development, Northern Vietnam

1. Introduction

Cultural heritage is a source of sustainable development and a treasure-trove of collective memory. Historic buildings can be conserved to protect architectural heritage, but also can help to preserve local knowledge, cultural identity, education, social cohesion and place-based livelihoods [1], [2]. It is the residents who experience heritage in their daily lives and who can be custodians, practitioners, interpreters and partners in

This work is licensed under a Creative Commons Attribution License (https://creativecommons.org/licenses/by/4.0/) that allows others to share and adapt the material for any purpose (even commercially), in any medium with an acknowledgement of the work's authorship and initial publication in this journal.

heritage management who influence these outcomes. Administrative regulation and expert intervention are still important but not a replacement of meaningful opportunities for community involvement.

The context of Northern Vietnam is suitable, as heritage can be felt in historical sites, religious and ritual contexts, traditional festivals, craft activities and where cultural meaning meets livelihood. These settings can manifest opportunities, or tensions, such as increased belonging and economic opportunity from conservation, but reduced opportunities for participation due to time, resources, and/or decision-making power. This research does not seek to make an assumption about a uniform relationship between residents and heritage policy and instead analyzes residents' perceptions, capabilities and intentions within heritage-related communities. Vietnam has a law on Cultural Heritage (No. 45/2024/QH15) that defines the responsibilities to protect and promote cultural heritage [3]. International heritage conventions also highlight the importance of community involvement and the continuity of cultural practices [1], [2] and sustainable development [4]. But, even if residents recognize these principles, they do not necessarily mean that they will want to participate. They may appreciate the heritage value and be skeptical of the possibility of participation, the support of local authorities, or an equitable distribution of benefits from conservation.

In Vietnam, there is a link between sustainable tourism and the awareness of the community about the conservation of heritage, and between heritage memory, identity, and feelings related to place and sustainable cultural tourism [5], [6]. Involvement of the community and coordination of institutions is also emphasized in the management of change in heritage in international research [7], [8]. These are complemented by a wider body of work related to place attachment [9] and [10] and its relation to place satisfaction [11] and social exchange in tourism [12] and heritage values and conservation intentions [13] and [14]. They argue that the individual choice only includes part of the story; there is a social, emotional, institutional and distributive component to residents' participation as well.

There are three interrelated gaps that are pertinent to this study. First, the consideration of benefits, heritage values, governance and personal capacity has been done separately and only the connection between benefits and personal capacity has been partially explicitly stated in this empirical context. Secondly, the potential indirect pathway from these antecedents to conservation participation intention is conceptualized as a pathway mediated by the role of heritage/place attachment, and this pathway needs to be tested together. Third, the normatively important construct of perceived fairness in benefit sharing is less commonly evaluated as a condition in which perceived benefits relate to intention. These gaps apply to integrating and interpreting existing constructs, not to any of the constructs being new. This research will be based on this theory, and will examine the theory-based model of the intention of residents to participate in cultural heritage conservation in Northern Vietnam. It focuses on four antecedents (perceived benefits (PB), heritage value awareness (HVA), local government support (LGS), and perceived behavioral control (PBC)), heritage/place attachment (HPA) as a mediator, and perceived fairness in benefit sharing (PFBS) as a moderator. The aim of the contribution is to provide a synthesis of the motivational, emotional, institutional and distributive dimensions of community-based governance of heritage. In the analysis and implications, the focus is on the intention, not on participation.

2. Literature review

2.1. Community participation in cultural heritage conservation

Cultural heritage conservation encompasses the identification, protection, maintenance, transmission, restoration, and interpretation of heritage values while attending to authenticity, integrity, and community meaning. It applies to material sites as well as living practices, knowledge, memories, and social relations associated with heritage. Under a sustainability perspective, conservation concerns both the continuity of heritage and the social conditions that enable communities to support that continuity over time. Residents are directly affected by the use, regulation, and transformation of heritage spaces, and their daily practices may help safeguard cultural significance. The UNESCO sustainable development approach and the ICOMOS cultural tourism framework recognize the relevance of host-community interests and participation in heritage

management [4], [15]. Empirical research similarly points to the importance of awareness and place-related attachment [5], [6], alongside community participation and governance support [7], [8]. In this article, community participation is addressed specifically through residents' stated intention to engage in conservation-related activities; it is not treated as a measure of verified conservation behavior.

2.2. Theoretical foundations

The framework draws on four complementary perspectives. The theory of planned behavior identifies perceived behavioral control as one determinant of intention, alongside attitude and subjective norms [16]. In the present model, perceived behavioral control captures whether residents believe they have the ability and opportunity to contribute; the study does not claim to test the complete theory of planned behavior. Social exchange theory provides the rationale for examining perceived benefits: participation may be viewed more favorably when heritage conservation offers meaningful cultural, educational, social, or livelihood-related advantages [12].

Place attachment research describes the emotional and symbolic connection between people and meaningful settings, including identity, memory, and belonging [9], [11]. Such connections may provide a pathway through which perceived benefits, recognized heritage values, local support, and perceived participation capacity become associated with conservation intention. Equity theory adds a distributive perspective: individuals evaluate not only whether benefits exist, but also whether their allocation appears fair [17]. In this framework, fairness is expected to condition the positive association between perceived benefits and participation intention.

Taken together, the theories assign different functions within the same conceptual argument. Social exchange theory motivates the benefits construct; planned behavior theory identifies perceived capacity to act; place attachment research explains why evaluations of heritage may coincide with emotional connection; and equity theory explains why benefit-sharing fairness may condition an otherwise positive benefit-intention relationship. The combined framework thus addresses social sustainability through participation, connection to place, institutional support, and perceived distributive fairness.

2.3. Hypothesis development

The hypotheses are perceived benefits, awareness of heritage value, support from local government, perceived behavioral control, attachment to heritage places, and perceived fairness in the benefit-sharing. The proposed relationships are based on residents' stated intentions, not observed conservation behaviours: they represent expectations of statistical associations but not claims of causation. According to social exchange theory, residents' perceptions and understanding of the benefits of culture, education, society and livelihood may have a positive relationship with their recognition of the cultural, educational, social and livelihood benefits of the cultural heritage settings [12]. This means that the perceived benefits can align with higher levels of heritage/place attachment. H1: This is a positive association between perceived benefits (PB) and Heritage/place attachment (HPA).

Heritage value awareness (HVA) relates to the appreciation of local heritage in terms of its history, culture and symbolism. Studies on heritage value perceptions and place identity and attachment have indicated that people who are aware of heritage values are likely to have stronger feelings about heritage settings [9], [13]. Thus, H2 suggests a positive correlation between HVA and HPA. Local government support (LGS) can influence residents' attitudes to heritage settings by providing information, consultation opportunities and credible coordination. Evidence of community involvement and institutional involvement in heritage conservation suggests that perceived local support will align with attachment [7], [8]. H3 suggests a positive relationship between LGS and HPA. Perceived behavioral control is defined as a belief of ability and opportunity to act as a determinant of the theory of planned behavior [16]. In a heritage context, the residents who feel they can participate can also feel more connected to the places and practices they can help to sustain. This pathway of attachment, rather than testing the full theory of planned behavior or a direct PBC-IPCHC pathway, is considered in the present model. H4 suggests a positive relationship between perceived behavioral control (PBC) and HPA.

Place attachment refers to emotional and symbolic bonds based on identity, memory, belonging and experiences of meaningful places [10], [11]. This can be accompanied by a stronger commitment to the continuity of the heritage through conservation-related activities. Thus, H5 suggests a positive relationship between HPA and IPCHC.

The perceived benefits can also be directly linked to residents' expressed willingness to participate in conservation. Social exchange considerations may offer motives for collective heritage protection, through cultural, social, educational and livelihood related outcomes that are expected [12]. This study therefore proposes positive association between PB and intention to participate in cultural heritage conservation (IPCHC). In addition to the benefits consideration, equity theory also introduces a distributive consideration: residents can also assess if benefits are being fairly distributed by conservation [17]. Thus, when benefits are perceived as legitimate, the intention to participate may be more strongly related to perceived benefits. H7 suggests that the relationship between PB-IPCHC is positively moderated by the perceived fairness in benefit sharing (PFBS), such that this relationship is stronger when the level of PFBS is higher. Lastly, there could be an indirect connection between evaluation of heritage conservation and intention to participate as place attachers [9], [11]. H8a, H8b, H8c, and H8d suggest positive indirect relationships between PB, HVA, LGS, and PBC with IPCHC mediated by HPA. The following are only hypotheses of statistical mediation in the cross-sectional model and not hypotheses of temporal mediation or causation.

2.4. Research model

The proposed model comprises four antecedents (PB, HVA, LGS, and PBC), one mediator (HPA), one outcome (intention to participate in cultural heritage conservation, IPCHC), and one moderator (PFBS). Figure 1 depicts the hypothesized direct paths, the attachment-related indirect paths, and moderation of the PB-IPCHC relationship.

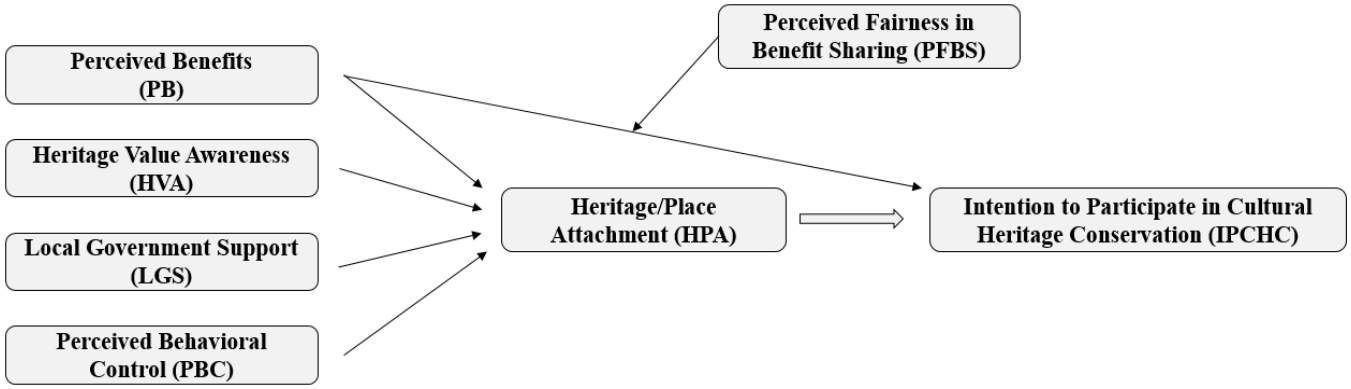

Figure 1. Proposed research model

3. Research methodology

3.1. Research design and study context

A sequential mixed-methods design was applied: qualitative interviews informed questionnaire wording, a preliminary survey assessed item clarity and internal consistency, and the main cross-sectional survey supplied data for factor and structural analyses. The design was intended to combine locally intelligible survey wording with a theory-driven quantitative model. The quantitative stage examined associations among the seven constructs; it was not designed to identify causal effects.

The study addressed adults aged 18 years or older living in communities associated with cultural heritage places and practices in Northern Vietnam. The study context included heritage-related settings in which residents' daily lives may intersect with local festivals, ritual activities, craft traditions, cultural tourism, livelihoods, and public conservation efforts. Given the non-probability sampling design, the study does not claim population-representative coverage of all communities or heritage types across Northern Vietnam.

3.2. Qualitative phase and scale refinement

The qualitative phase comprised 15 semi-structured interviews involving five stakeholder categories: local heritage and cultural management personnel; experts in culture, tourism, or heritage; artisans or representatives of heritage-practicing communities; residents living near heritage settings; and household or business representatives connected with tourism and services. The interviews were used for contextual clarification of the constructs rather than as a separate basis for estimating structural relationships. The interview prompts covered heritage values, perceived advantages and costs of conservation, local government support, attachment to heritage places, perceived fairness in the distribution of benefits, and feasible forms of involvement. Insights from these discussions informed the clarity and contextual relevance of the questionnaire wording before quantitative testing. The interviews were used for measurement refinement, not for the estimation of quantitative effects.

3.3. Quantitative phase, sampling, and data collection

A pilot survey of 60 respondents was conducted to check the clarity and internal consistency of the questionnaire. The subsequent main survey was carried out in 2026 using non-probability recruitment of adult residents in heritage-related communities. Of 670 questionnaires distributed, 600 were completed and considered usable (89.6% of those distributed). Responses used a five-point Likert scale ranging from 1 (strongly disagree) to 5 (strongly agree). The non-probability design limits statistical generalization beyond the surveyed respondents. The instrument comprised two parts. The first recorded gender, age, education, occupation, length of residence, previous participation in heritage-related activities, and interest in local heritage. The second measured the seven modeled constructs: perceived benefits (PB), heritage value awareness (HVA), local government support (LGS), perceived behavioral control (PBC), heritage/place attachment (HPA), perceived fairness in benefit sharing (PFBS), and intention to participate in cultural heritage conservation (IPCHC). The conceptual definitions draw on social exchange research [12], place attachment research [9], [11], planned behavior theory [16], and equity theory [17]. The interview and pilot stages were used to refine contextual wording. Table 1 summarizes the initial and retained item counts.

3.4. Measurement and data analysis strategy

SPSS and AMOS were used for descriptive analyses, Cronbach's alpha, exploratory factor analysis (EFA), confirmatory factor analysis (CFA), covariance-based structural equation modeling (CB-SEM), bootstrap analysis of indirect effects, and a separate interaction-based moderation test. CB-SEM was appropriate for examining the prespecified theory-driven measurement and structural relations and for reporting global model fit in AMOS [18], [19]. Reliability and construct validity were considered with reference to established measurement literature [18], [20] and additional methodological and psychometric guidance [21], [22]; the indirect effects were assessed using bootstrap confidence intervals [23]. Predictor and moderator variables were standardized for the reported interaction model. The estimated relationships should be interpreted as associations because the main survey was cross-sectional.

Table 1. Measurement structure of the research model

Construct	Code	Role	Initial items	Retained items
Perceived benefits from heritage conservation	PB	Independent variable	5	PB1-PB5
Heritage value awareness	HVA	Independent variable	6	HVA1-HVA6
Local government support	LGS	Independent variable	4	LGS1-LGS4
Perceived behavioral control	PBC	Independent variable	5	PBC1-PBC4
Heritage/place attachment	HPA	Mediating variable	6	HPA1-HPA5
Perceived fairness in benefit sharing	PFBS	Moderating variable	4	PFBS1-PFBS4

Construct	Code	Role	Initial items	Retained items
Intention to participate in cultural heritage conservation	IPCHC	Dependent variable	5	IPCHC1-IPCHC5

4. Results

4.1. Sample characteristics

Table 2 describes the 600 usable questionnaires. Women accounted for 51.2% of respondents, men for 47.8%, and other respondents for 1.0%. The two largest age categories were 26-35 years (27.8%) and over 45 years (27.7%). The sample also varied in education, occupation, length of residence, prior involvement in heritage activities, and interest in heritage. These distributions characterize the analyzed respondents but do not establish regional representativeness under non-probability recruitment.

Table 2. Sample characteristics

Category	Group	Frequency	Percentage (%)
Gender	Male	287	47.8
Gender	Female	307	51.2
Gender	Other	6	1.0
Age	18-25	109	18.2
Age	26-35	167	27.8
Age	36-45	158	26.3
Age	Over 45	166	27.7
Education	High school or below	191	31.8
Education	Vocational/college	151	25.2
Education	University	211	35.2
Education	Postgraduate	47	7.8
Occupation	Public official/employee	85	14.2
Occupation	Business/service sector	143	23.8
Occupation	Freelance worker	133	22.2
Occupation	Agriculture	97	16.2
Occupation	Student	70	11.7
Occupation	Other	72	12.0
Length of residence	Under 5 years	62	10.3
Length of residence	5-10 years	107	17.8
Length of residence	Over 10 years	193	32.2
Length of residence	Born locally	238	39.7
Participation in heritage-related activities	Never	191	31.8
Participation in heritage-related activities	Occasionally	313	52.2
Participation in heritage-related activities	Frequently	96	16.0
Interest in local heritage	No interest	19	3.2
Interest in local heritage	Little interest	61	10.2

Category	Group	Frequency	Percentage (%)
Interest in local heritage	Neutral	145	24.2
Interest in local heritage	Interested	268	44.7
Interest in local heritage	Very interested	107	17.8

4.2. Reliability and validity of the measurement model

Following EFA, two items (HPA6 and PBC5) were removed because they did not exhibit the desired factor structure. Cronbach's alpha ranged from 0.843 to 0.895, composite reliability (CR) from 0.830 to 0.890, and average variance extracted (AVE) from 0.533 to 0.595 across the retained constructs. The CFA standardized loading ranges are reported in Table 3. These statistics support internal consistency and convergent validity within the reported model. A complete pairwise discriminant-validity matrix is not included in the present tables; therefore, discriminant validity should not be inferred solely from CR and AVE.

Table 3. Construct-level descriptive statistics and measurement reliability

Construct	Mean	Cronbach's Alpha	CR	AVE	Standardized loading range
PB	3.446	0.870	0.872	0.579	0.657-0.814
HVA	3.480	0.887	0.890	0.575	0.700-0.801
LGS	3.503	0.843	0.848	0.583	0.731-0.796
PBC	3.397	0.870	0.830	0.550	0.670-0.804
HPA	3.422	0.895	0.869	0.570	0.722-0.806
PFBS	3.444	0.851	0.854	0.595	0.733-0.805
IPCHC	3.440	0.845	0.850	0.533	0.683-0.802

Note: CR and AVE are reported from the retained standardized CFA loadings. HPA6 and PBC5 were removed in EFA before the final CFA and structural analyses.

4.3. EFA, CFA, and structural model fit

The initial EFA yielded KMO = 0.909 and a significant Bartlett's test (χ^2 = 11,373.393; df = 595; $p < 0.001$). After excluding HPA6 and PBC5, the final EFA retained 33 items across seven factors (KMO = 0.895; Bartlett's χ^2 = 9,398.911; df = 528; $p < 0.001$; total variance explained = 57.430%). Table 4 summarizes these diagnostics. The CFA output in Figure 2 reports χ^2 = 547.422 (df = 474), χ^2/df = 1.155, GFI = 0.949, CFI = 0.992, TLI = 0.991, and RMSEA = 0.016, indicating good overall fit according to the reported indices. These global fit indices complement, but do not replace, construct-level validity assessment.

Table 4. EFA results after item refinement

Indicator	Value	Interpretation
Initial KMO	0.909	Excellent sampling adequacy
Initial Bartlett's test	χ^2 = 11373.393; df = 595; $p < 0.001$	Significant
Final KMO	0.895	Good sampling adequacy
Final Bartlett's test	χ^2 = 9398.911; df = 528; $p < 0.001$	Significant
Number of retained factors	7	Consistent with the measurement structure
Items removed after EFA	HPA6; PBC5	Improved factor structure
Total variance explained	57.430%	Adequate

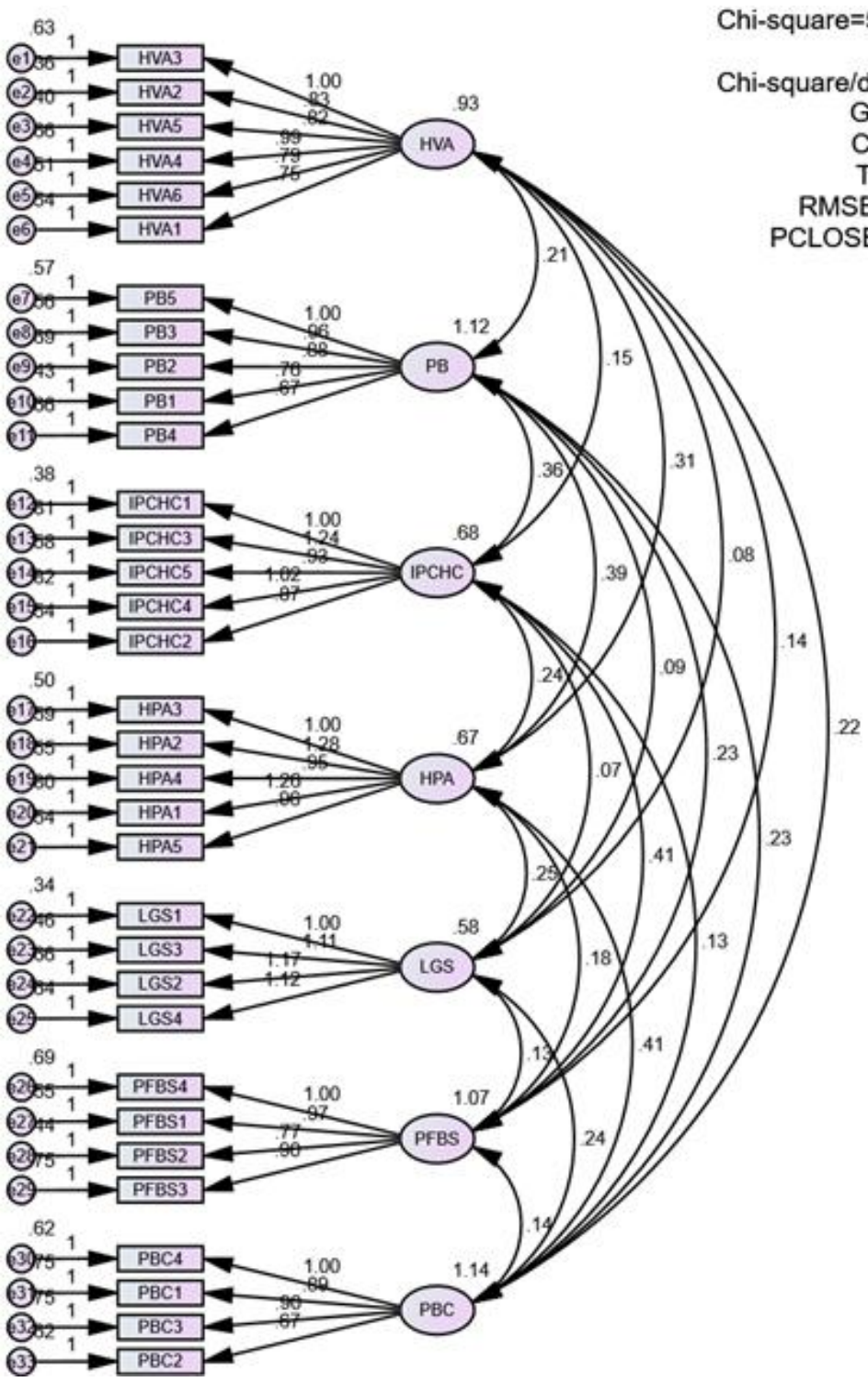

Figure 2. Overall CFA results (AMOS unstandardized estimates)

4.4. Structural relationships

The structural model also showed good reported global fit: $\chi^2 = 423.303$ (df = 365), $\chi^2/df = 1.160$, GFI = 0.955, CFI = 0.993, TLI = 0.992, and RMSEA = 0.016 (Figure 3). All six specified direct associations were positive and statistically significant (Table 5). Perceived benefits had the largest standardized association with HPA (β = 0.311), followed by perceived behavioral control (β = 0.276), local government support (β = 0.255), and heritage value awareness (β = 0.236). PB (β = 0.320) and HPA (β = 0.215) were positively related to IPCHC. The model accounted for 46.0% of the variance in HPA and 21.0% of the variance in IPCHC. These coefficients describe conditional statistical relationships rather than causal effects.

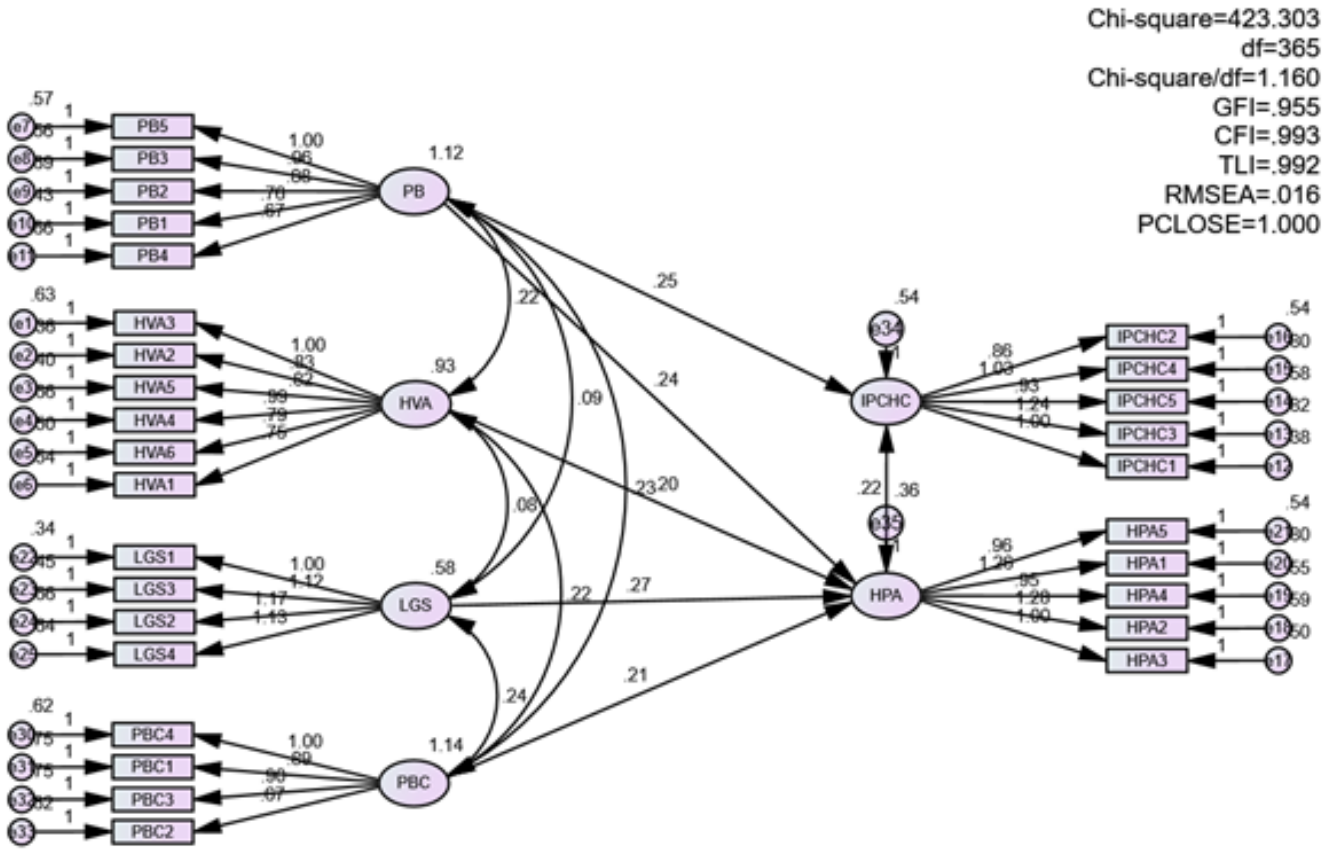

Figure 3. SEM results (AMOS unstandardized estimates)

Table 5. Hypothesis testing results

Hypothesis	Path	Unstd. estimate	Standardized β	C.R.	p-value	Conclusion
H1	PB → HPA	0.241	0.311	7.492	<0.001	Accepted
H2	HVA → HPA	0.200	0.236	5.807	<0.001	Accepted
H3	LGS → HPA	0.273	0.255	6.041	<0.001	Accepted
H4	PBC → HPA	0.211	0.276	6.260	<0.001	Accepted
H5	HPA → IPCHC	0.217	0.215	4.254	<0.001	Accepted
H6	PB → IPCHC	0.250	0.320	6.237	<0.001	Accepted
R^2	HPA	-	0.460	-	-	Moderate
R^2	IPCHC	-	0.210	-	-	Acceptable

4.5. Mediation and moderation results

Bootstrap confidence intervals indicated positive indirect associations through HPA for all four antecedents (Table 6). Standardized indirect effects were PB → HPA → IPCHC (β = 0.067), HVA → HPA → IPCHC (β = 0.051), LGS → HPA → IPCHC (β = 0.055), and PBC → HPA → IPCHC (β = 0.059); the reported 95% confidence intervals excluded zero. Thus, H8a-H8d were supported as statistical mediation hypotheses. A separate moderation model yielded a positive PB × PFBS interaction associated with IPCHC (β = 0.162, p < 0.001; Figure 4), supporting H7. Substantively, the positive PB-intention association was stronger at higher perceived fairness. Because this interaction was estimated in a separate specification, its coefficient should not be compared mechanically with standardized coefficients from the main structural model.

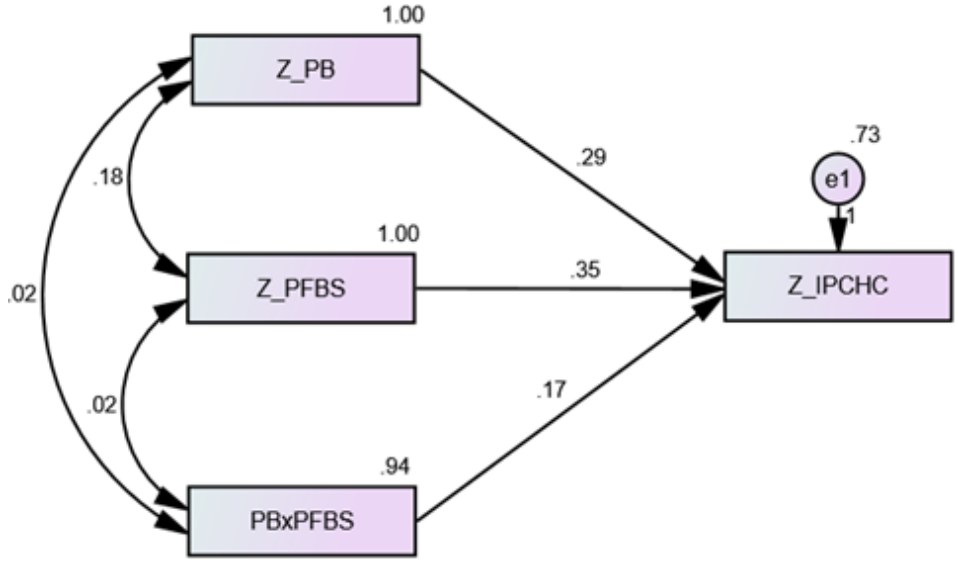

Figure 4. Moderation testing results using standardized variables

Table 6. Mediation and moderation results

Test	Relationship	Unstd. estimate	95% confidence interval	Standardized β	p-value	Conclusion
Mediation	PB → HPA → IPCHC	0.052	[0.032; 0.079]	0.067	0.001	Significant
Mediation	HVA → HPA → IPCHC	0.044	[0.023; 0.071]	0.051	0.001	Significant
Mediation	LGS → HPA → IPCHC	0.059	[0.033; 0.094]	0.055	0.001	Significant
Mediation	PBC → HPA → IPCHC	0.046	[0.027; 0.069]	0.059	0.001	Significant
Moderation	PB × PFBS → IPCHC	0.167	-	0.162	<0.001	Significant

5. Discussion and implications

5.1. Discussion of the main findings

The findings show positive associations of residents' stated intention to participate in conservation with perceived benefits and heritage/place attachment. The PB-IPCHC and PB-HPA relationships observed are in line with the social exchange theory; perceived cultural, social, educational and livelihood-related benefits can be linked to increased support for heritage conservation [12]. These results relate to self-reported perceptions and intention, and do not indicate actual conservation participation or conservation improvements in heritage conditions.

The positive HVA-HPA relationship is similar to the findings of place attachment studies [9], [11] and heritage value perception and conservation intention studies [13], [14]. Emotional connections to identity and intergenerational continuity can be accompanied by recognition of historical, cultural and symbolic values. However, cross-sectional data cannot demonstrate that heritage education or interpretation leads to increase in attachment. The local government support perceived by the respondents was positively related to HPA. Improved information, facilitative consultation and effective coordination can help to foster a sense of shared responsibility for conservation among residents. LGS, however, doesn't measure performance of local authorities, but rather residents' perceptions of the level of support they receive.

The attachment-related pathway to HPA was positively correlated with perceived behavioral control. Similarly, those who feel they have sufficient information, time, skills and opportunities to be involved can also report higher levels of association with heritage settings. This is consistent with the planned behavior theory [16] but the study did not measure all components of the planned behavior theory (attitude and subjective norms) or a direct path of PBC-IPCHC. In sum, the indirect associations via the HPA are large, and they combine to support an attachment-based account of the relationship between residents' perceptions and perceived participation capacity on the one hand, and intention on the other. The positive moderation result suggests that residents who felt that they were benefiting from sharing were more likely to be associated with IPCHC. This interaction is not about actual resource distribution, but about how things look to the players. The data collected at a single time point do not provide information about temporal mediation or causal effects of policy interventions.

5.2. Theoretical implications

The study's first contribution is integrative. It combines social exchange arguments concerning benefits [12], perceived capability from planned behavior theory [16], place-based emotional connection [9], [11], and distributive evaluations from equity theory [17] within one heritage-conservation intention model. Rather than treating these dimensions as interchangeable, the specification distinguishes instrumental appraisals, perceived participation capacity, heritage/place attachment, and benefit-sharing fairness.

Second, the study reports positive indirect associations through HPA for benefits, heritage value awareness, local support, and perceived control. This is consistent with an attachment-based explanation of why residents' assessments and capabilities may relate to intention. Third, the positive PB × PFBS interaction introduces perceived distributive fairness as a condition of the benefits-intention association. These findings extend the interpretation of the proposed framework; they neither validate an unmeasured complete behavioral theory nor establish causal mechanisms from cross-sectional data.

5.3. Managerial and policy implications

These associations imply three priorities for heritage-conservation programs. Heritage managers and community partners could share local benefits as well as the historical, educational, cultural and identity values of heritage. Communication must be accessible and clear, not commodified; and communication must not be dominated by the views of the sector. Communication should be accessible and clear, but should not be dominated by the views of the sector or commodified. These options are not mutually exclusive; they can all be used in practice, and are ones that can be found locally, through education partnerships, or providing opportunities for residents to share their heritage knowledge.

Firstly, there are aspects of attachment – story telling, inter-generational activities, and community-led interpretation and opportunities for living memory, may be used to close the gap between conservation messages and memory, belonging and pride. These are suggested practices that are consistent with the model and not interventions that were assessed in this survey. Second, it would be advantageous if local governments could make participation in conservation more feasible and credible for residents by making information more accessible, providing opportunities for consultation and reporting, and providing guidance for residents with different levels of skills and time. Community meetings, resident monitoring groups and local volunteer networks can be helpful if created with participation from the community. These measures include the perceived support and participation capacity within institutions, which both showed a positive association with HPA in the surveyed sample. The goal is to remove what may be seen as obstacles to participation in practice and to make responsibilities, contact points and opportunities visible. The cross-sectional design will not allow for determination of the greatest causal effect of any administrative measure. Third, there is room to increase transparency and engagement in the benefit sharing process. Safeguards might involve having a clear set of eligibility requirements for community opportunities, open reporting of heritage-related revenues or support (where relevant), community feedback mechanisms, and resident participation in decision making on heritage use in their community. The definition of "fairness" should be based on the residents' point of view, not because of the economic benefits alone. This third priority is related to the moderation result: The association between

PB and intention was stronger when benefits were perceived as fairer. Programs that offer benefits without taking into account the perceived legitimacy of benefit distribution may thus ignore an important correlate of the willingness of residents to participate in the program. The three priorities (communication of valued benefits, enabling meaningful participation, enhancing perceived distributive fairness) should be tailored to the legal, cultural and institutional context of each heritage setting. Coordination and community participation in sustainable heritage conservation are also highlighted from previous studies [7], [8]. The practices proposed are not experimentally proven effects of the present model, and should be assessed in future implementation research.

5.4. Limitations and future research

The study has several limitations. First, its cross-sectional design precludes firm causal or temporal interpretations of the reported direct, indirect, or moderated relationships. Second, the dependent construct measures intention to participate, not observed conservation behavior or heritage outcomes. Longitudinal data, field observations, and behavioral indicators would help evaluate whether intentions translate into sustained participation. Third, non-probability recruitment in heritage-related communities of Northern Vietnam limits population-level generalization and site-to-site comparison. Future studies should specify and compare individual heritage types and geographic settings using transparent sampling frames. Fourth, although the reported reliability and convergent-validity statistics are satisfactory, reporting of a complete discriminant-validity matrix and item-level adaptation sources would strengthen measurement transparency. Extensions could also consider perceived costs, trust in local authorities, social norms, tourism pressure, and forms of digital participation.

6. Conclusion

This study examined residents' intention to participate in cultural heritage conservation in Northern Vietnam using qualitative scale refinement and a cross-sectional survey of 600 respondents. PB, HVA, LGS, and PBC were each positively associated with HPA; PB and HPA were positively associated with participation intention. These results identify a set of related perceptions and capabilities, not verified determinants of subsequent behavior. The evidence for four positive indirect associations through HPA, together with the positive PB × PFBS interaction, supports an integrated interpretation of community-centered heritage governance. Perceived advantages are relevant, but their association with conservation intention also needs to be understood alongside emotional bonds to heritage and the perceived legitimacy of benefit distribution. In this sense, the model brings motivational, institutional, emotional, and distributive aspects of social sustainability into one empirical account. For practice, the findings motivate attention to locally recognizable benefits and heritage values, accessible opportunities to participate, and transparent benefit-sharing procedures. Because sampling was non-probabilistic and the measures concerned intentions collected at one point in time, future research should evaluate these proposals using geographically detailed designs and observed participation outcomes.

Declaration of competing interest

The authors declare that they have no known financial or non-financial competing interests related to this study.

Funding information

No funding was received from any financial organization to conduct this research.

Acknowledgements

The authors gratefully acknowledge the residents, local representatives, and individuals who provided comments during the qualitative phase and survey refinement.

Author contribution

Vu Thi Nga: study conception and design, data collection, and draft preparation; Nguyen Thi Ngoc Lam: data curation, analysis, and interpretation of results; Nguyen Thi Viet Hung: manuscript review, editing and final

revision. Nguyen Thi Thanh Nga: manuscript review, editing and final revision. All authors approved the final version of the manuscript.

Ethical approval statement

Because this study used an anonymous, non-interventional survey of adult residents and did not collect personally identifiable or sensitive information, formal ethical approval was not applicable under the authors' institutional requirements. The research followed the principles of voluntary participation, informed consent, anonymity, and confidentiality.

Informed consent

Informed consent was obtained from all participants before they completed the questionnaire. The survey did not include information that could identify individual respondents.

References

[1] UNESCO, Convention Concerning the Protection of the World Cultural and Natural Heritage. Paris, France: UNESCO, 1972.

[2] UNESCO, Convention for the Safeguarding of the Intangible Cultural Heritage. Paris, France: UNESCO, 2003.

[3] National Assembly of Vietnam, Law on Cultural Heritage, No. 45/2024/QH15. Hanoi, Vietnam, 2024.

[4] UNESCO World Heritage Centre, Policy Document for the Integration of a Sustainable Development Perspective into the Processes of the World Heritage Convention. Paris, France: UNESCO, 2015.

[5] T. P. Nguyen, "The impact of sustainable tourism on local community cultural heritage conservation awareness in Hanoi," Heritage and Sustainable Development, vol. 7, no. 2, pp. 675–690, Jul. 2025, https://doi.org/10.37868/hsd.v7i2.1233.

[6] V. T. Vu and T. P. Nguyen, "Heritage memory and identity in Vietnam with a focus on residents' topophilia for sustainable cultural tourism development," Heritage and Sustainable Development, vol. 8, no. 1, pp. 55–76, Jan. 2026, https://doi.org/10.37868/hsd.v8i1.1758.

[7] K. M. Ibrahim, Z. A. Al-Jaberi, and R. F. M. Ameen, "Activating the potentiality of local community participation in preserving cultural heritage," Heritage and Sustainable Development, vol. 7, no. 1, pp. 223–244, Mar. 2025, https://doi.org/10.37868/hsd.v7i1.874.

[8] H. S. Senah, H. M. Hasan, K. Alabdali, and A. M. Jabbar, "Preserving heritage for Iraqi cities: Urban modernization approaches according to expert opinions," Heritage and Sustainable Development, vol. 7, no. 2, pp. 1199–1212, Nov. 2025, https://doi.org/10.37868/hsd.v7i2.1669.

[9] G. Kyle, A. Graefe, R. Manning, and J. Bacon, "Effects of place attachment on users' perceptions of social and environmental conditions in a natural setting," Journal of Environmental Psychology, vol. 24, no. 2, pp. 213–225, Jun. 2004, https://doi.org/10.1016/j.jenvp.2003.12.006.

[10] G. T. Kyle, A. R. Graefe, and R. E. Manning, "Testing the dimensionality of place attachment in recreational settings," Environment and Behavior, vol. 37, no. 2, pp. 153–177, Mar. 2005, https://doi.org/10.1177/0013916504269654.

[11] H. Ramkissoon, L. D. G. Smith, and B. Weiler, "Relationships between place attachment, place satisfaction and pro-environmental behaviour in an Australian national park," Journal of Sustainable Tourism, vol. 21, no. 3, pp. 434–457, 2013, https://doi.org/10.1080/09669582.2012.708042.

[12] R. Nunkoo and H. Ramkissoon, "Power, trust, social exchange and community support," Annals of Tourism Research, vol. 39, no. 2, pp. 997–1023, Apr. 2012, https://doi.org/10.1016/j.annals.2011.11.017.

[13] L. Wang, J. Nordin, and H. Liu, "Participation intention in cultural heritage conservation across generations: The influence of differential heritage value perception and place attachment," International Journal of Urban Sustainable Development, vol. 17, no. 1, pp. 336–357, 2025, https://doi.org/10.1080/19463138.2025.2587386.

[14] J. Xie, H. Li, K. Furuya, J. Chen, and S. Luo, "Participatory intention and behavior in green cultural heritage conservation: An application of the extended theory of planned behavior," Heritage Science, vol. 12, Art. no. 299, 2024, https://doi.org/10.1186/s40494-024-01407-x.

[15] ICOMOS, International Cultural Tourism Charter: Managing Tourism at Places of Heritage Significance. Mexico, 1999.

[16] I. Ajzen, "The theory of planned behavior," Organizational Behavior and Human Decision Processes, vol. 50, no. 2, pp. 179–211, Dec. 1991, https://doi.org/10.1016/0749-5978(91)90020-T.

[17] J. S. Adams, "Inequity in social exchange," in Advances in Experimental Social Psychology, vol. 2, L. Berkowitz, Ed. New York, NY, USA: Academic Press, 1965, pp. 267–299, https://doi.org/10.1016/S0065-2601(08)60108-2.

[18] J. F. Hair, W. C. Black, B. J. Babin, and R. E. Anderson, Multivariate Data Analysis, 8th ed. Andover, U.K.: Cengage, 2019.

[19] B. M. Byrne, Structural Equation Modeling with AMOS: Basic Concepts, Applications, and Programming, 3rd ed. New York, NY, USA: Routledge, 2016. https://doi.org/10.4324/9781315757421.

[20] C. Fornell and D. F. Larcker, "Evaluating structural equation models with unobservable variables and measurement error," Journal of Marketing Research, vol. 18, no. 1, pp. 39–50, Feb. 1981, https://doi.org/10.1177/002224378101800104.

[21] R. P. Bagozzi and Y. Yi, "On the evaluation of structural equation models," Journal of the Academy of Marketing Science, vol. 16, no. 1, pp. 74–94, 1988, https://doi.org/10.1007/BF02723327.

[22] J. C. Nunnally and I. H. Bernstein, Psychometric Theory, 3rd ed. New York, NY, USA: McGraw-Hill, 1994.

[23] K. J. Preacher and A. F. Hayes, "Asymptotic and resampling strategies for assessing and comparing indirect effects in multiple mediator models," Behavior Research Methods, vol. 40, no. 3, pp. 879–891, 2008, https://doi.org/10.3758/BRM.40.3.879.